The magnet Lattice of the MAX IV Storage Rings

Mikael Eriksson, Lars-Johan Lindgren and Hamed Tarawneh

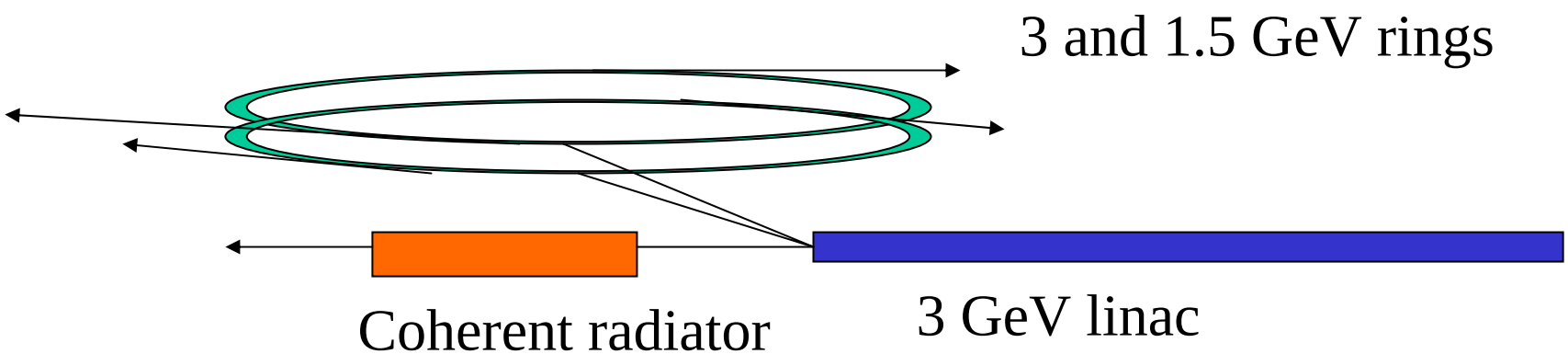

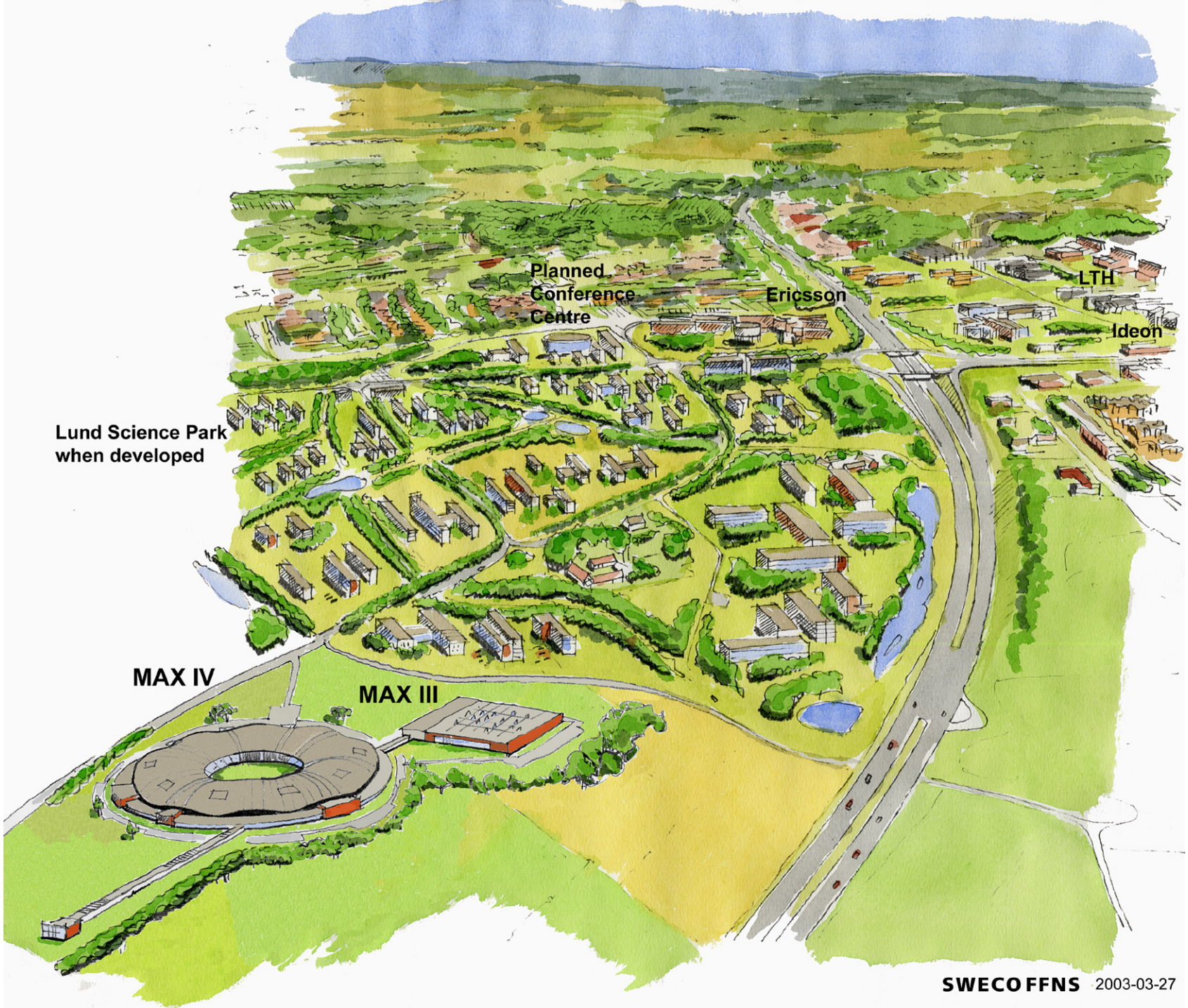
Planned
Conference
Centre
Ericsson
LTH
Ideon
Lund Science Park
when developed
MAX IV
MAX III
SWECO FFNS
2003-03-27

MAX IV with LINAC injector

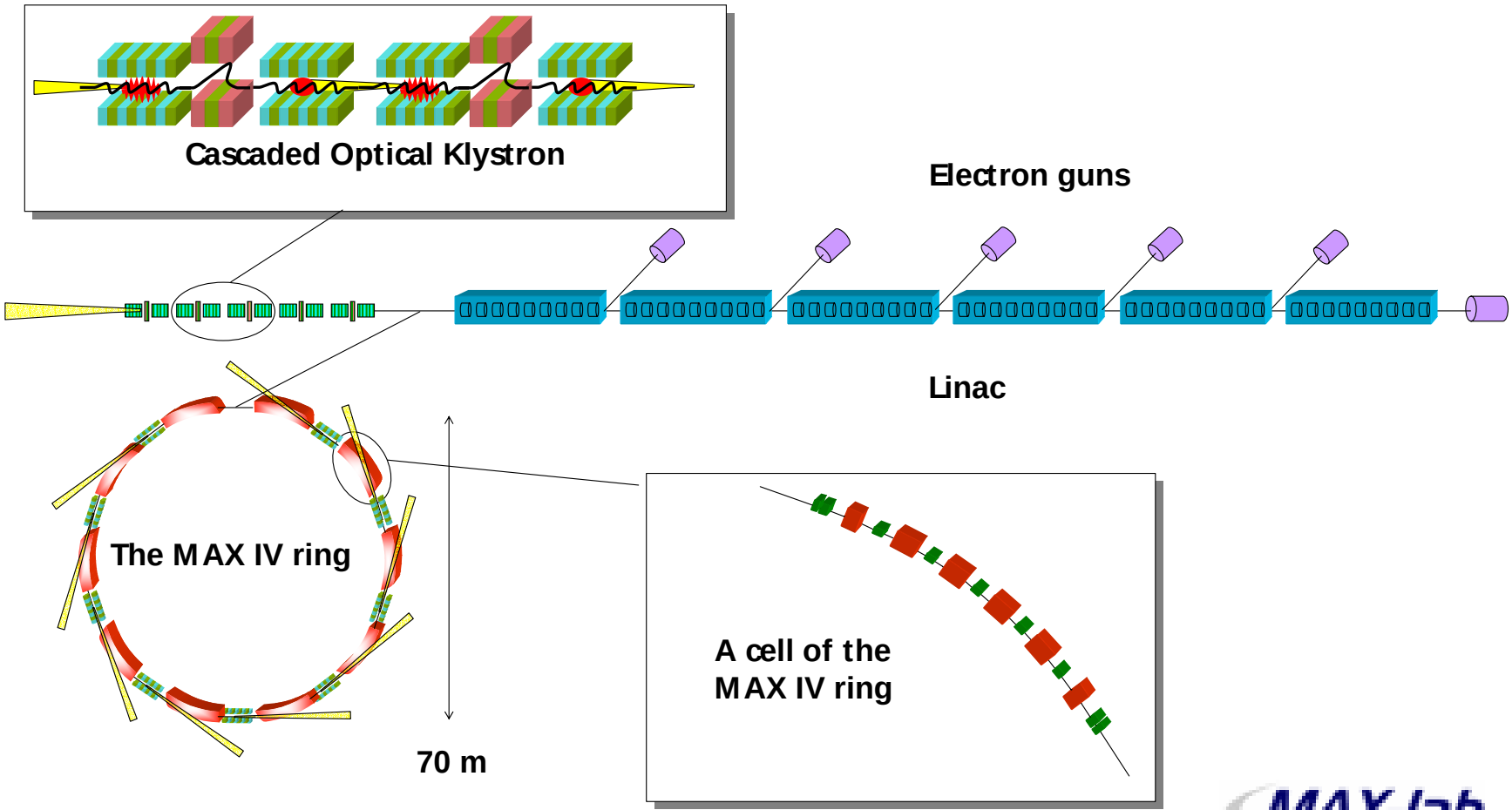

M. Eriksson, SRI 2003

Magnet lattice

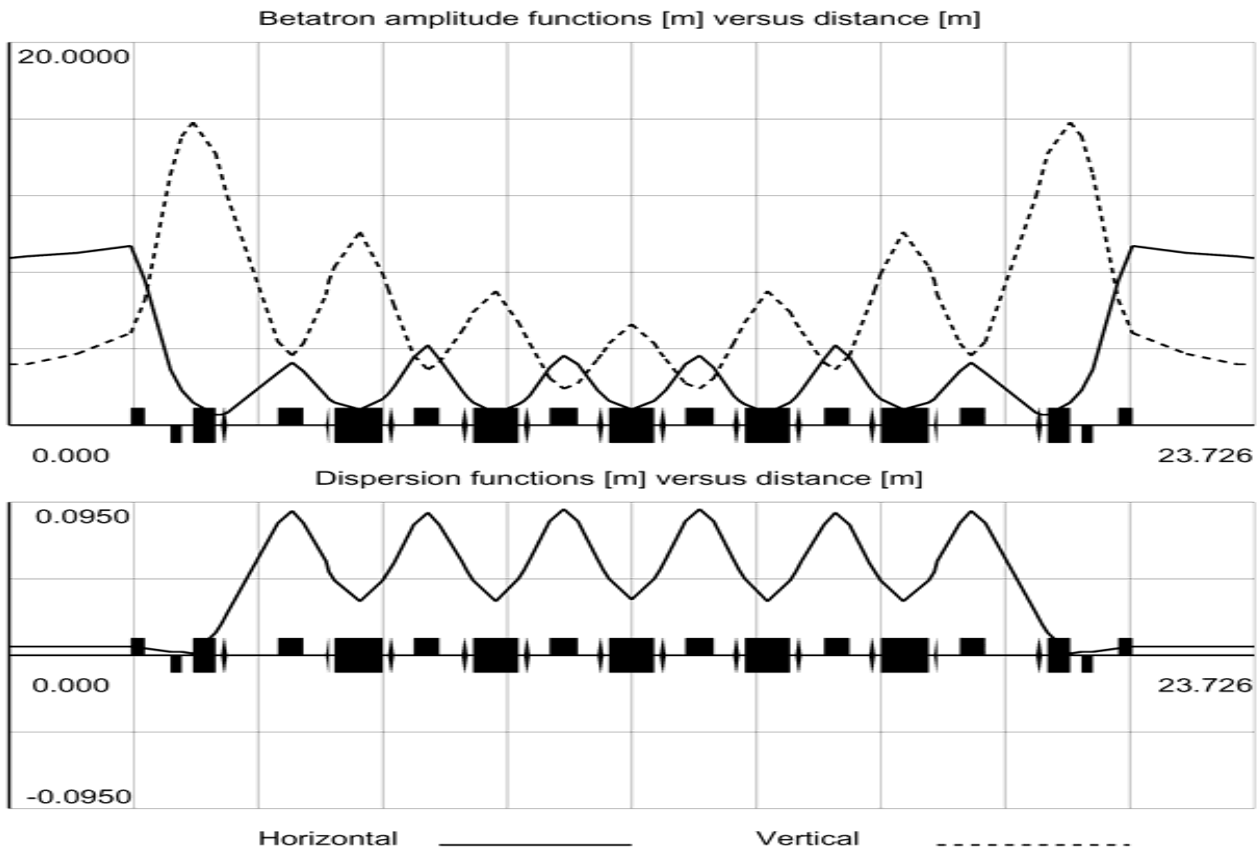

Lattice parameter list

	X-ray ring	Soft X-ray ring
Ring circumpherence (m)	285	285
Operating energy (GeV)	3	1.5
Circulating current (A)	0.5	0.5
Hor emittance (nm rad)	0.86	0.3
Hor admittance (μm rad)	17	17
Vert admittance (μm rad)	1.25	2.8
Energy acceptance (%)	4	4
Nr of straight sections	12	12
Length of straight sect. (m)	4.6	4.6

Beam life-times

Beam 1/e lifetime (h) @ 0.5 A

Touschek	14	33
El scattering	54	30
Bremsstrahlung	80	80
Total	10	13

Magnet technology

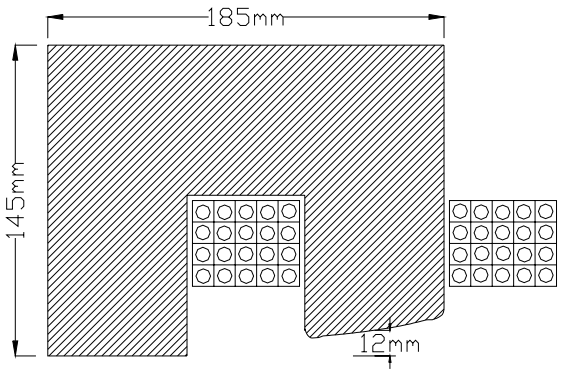

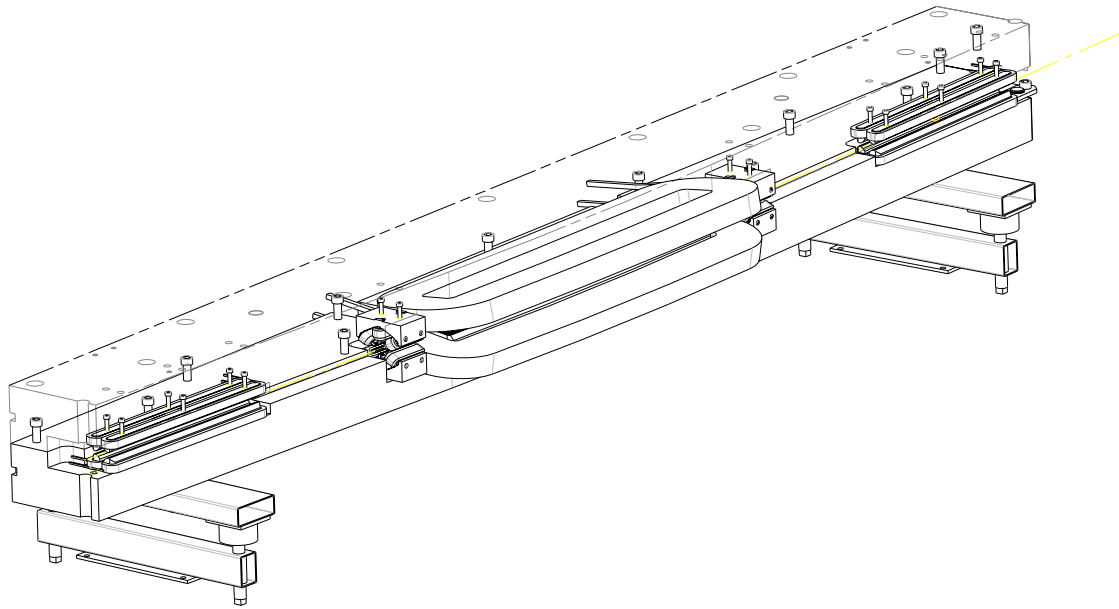

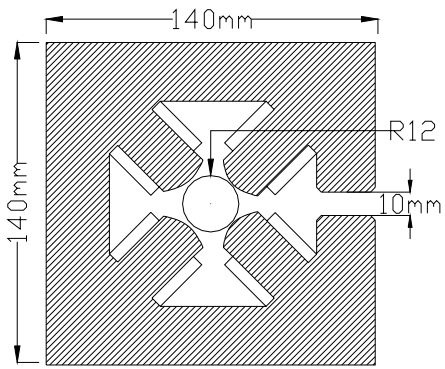

SC undulator

Superconducting undulators

λu	12 mm
Bmax	2 T
Kmax	2.3
N	200
Gap	3 mm

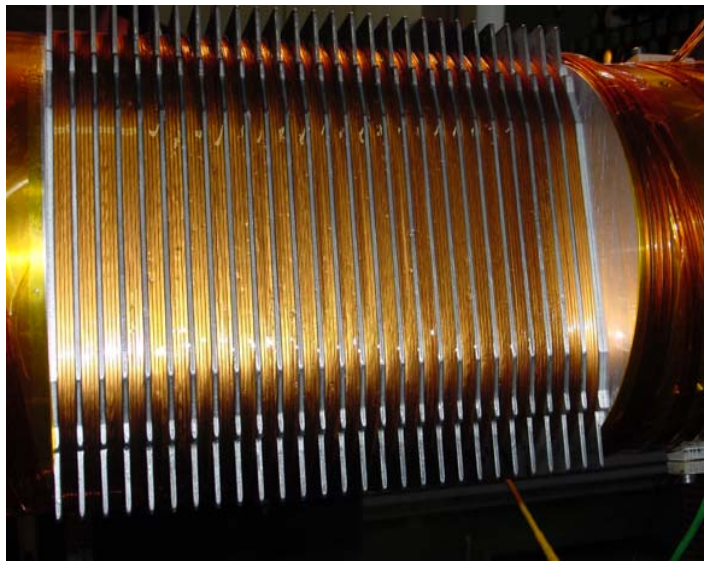

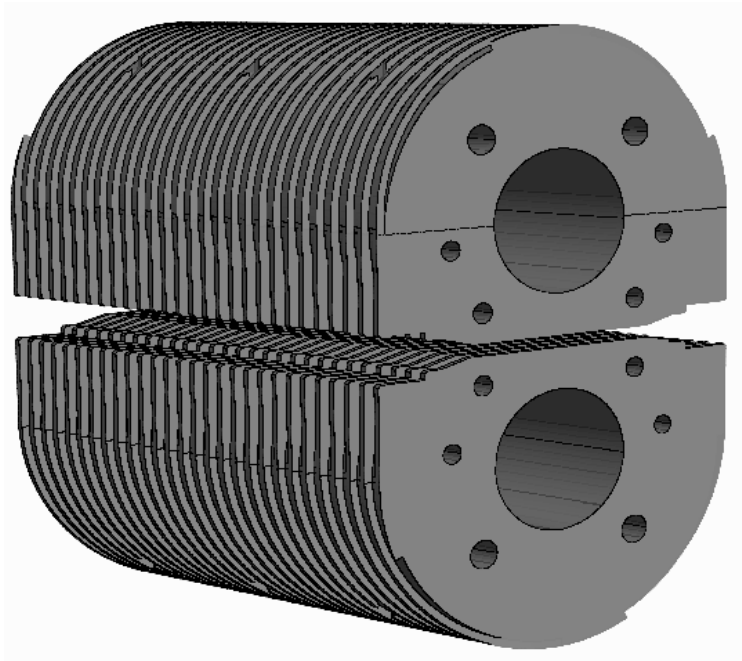

R. Rossmanith, H.O. Moser, EPAC 2000, Vienna, June 2000.

Radiation characteristics

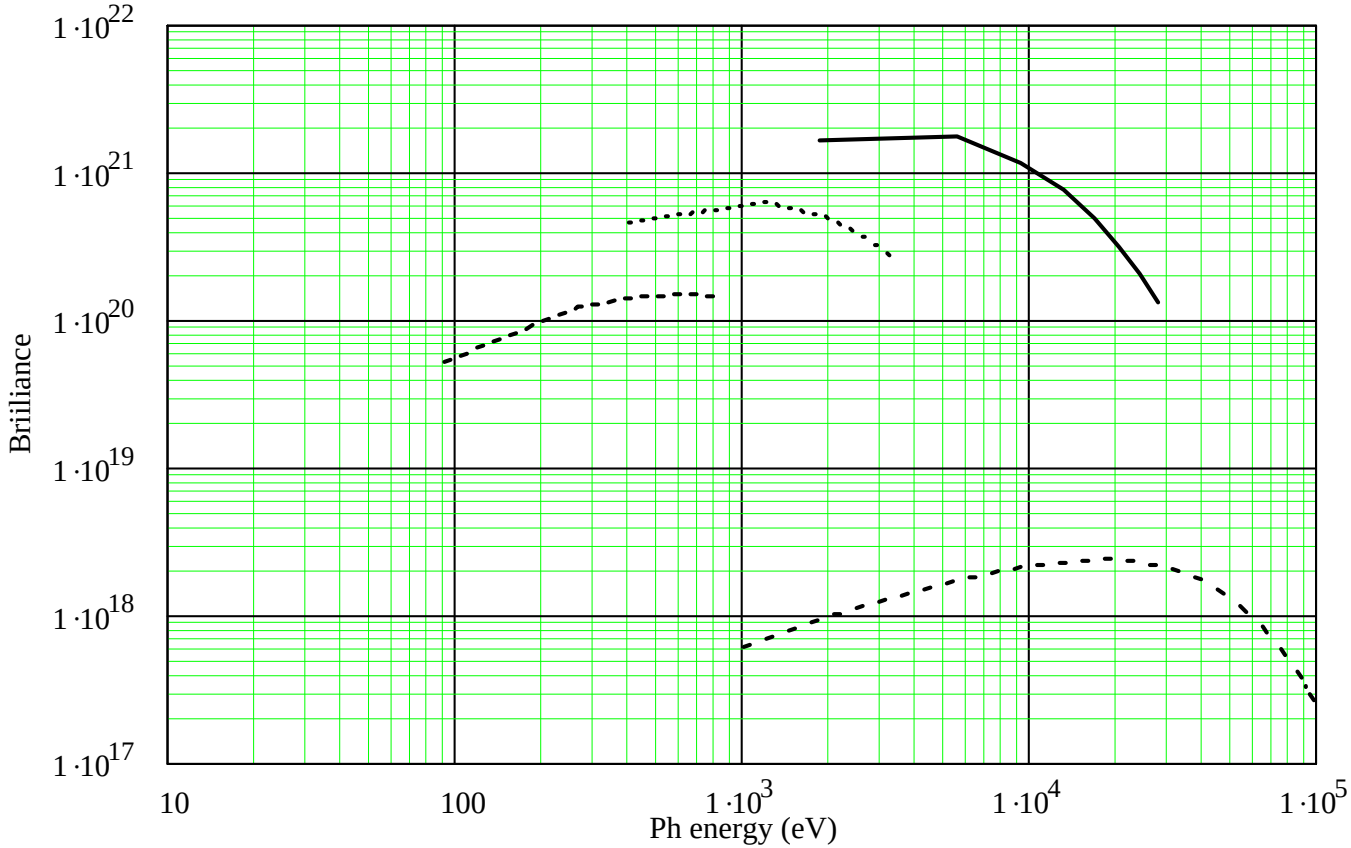

3 GeV und1, 13 mm per., K=2.2, gap=4 mm, N=200
1.5 GeV und2, 16 mm per., K=2.2, gap=6 mm, N=200
1.5 GeV und3, 21 mm per., K=4.6, gap=6 mm, N=150
3 GeV wigg, 60 mm per, K=20, gap=10 mm, N=30

Envelopes up to
und 11th harm

M. Eriksson, SRI 2003

Details of harmonics

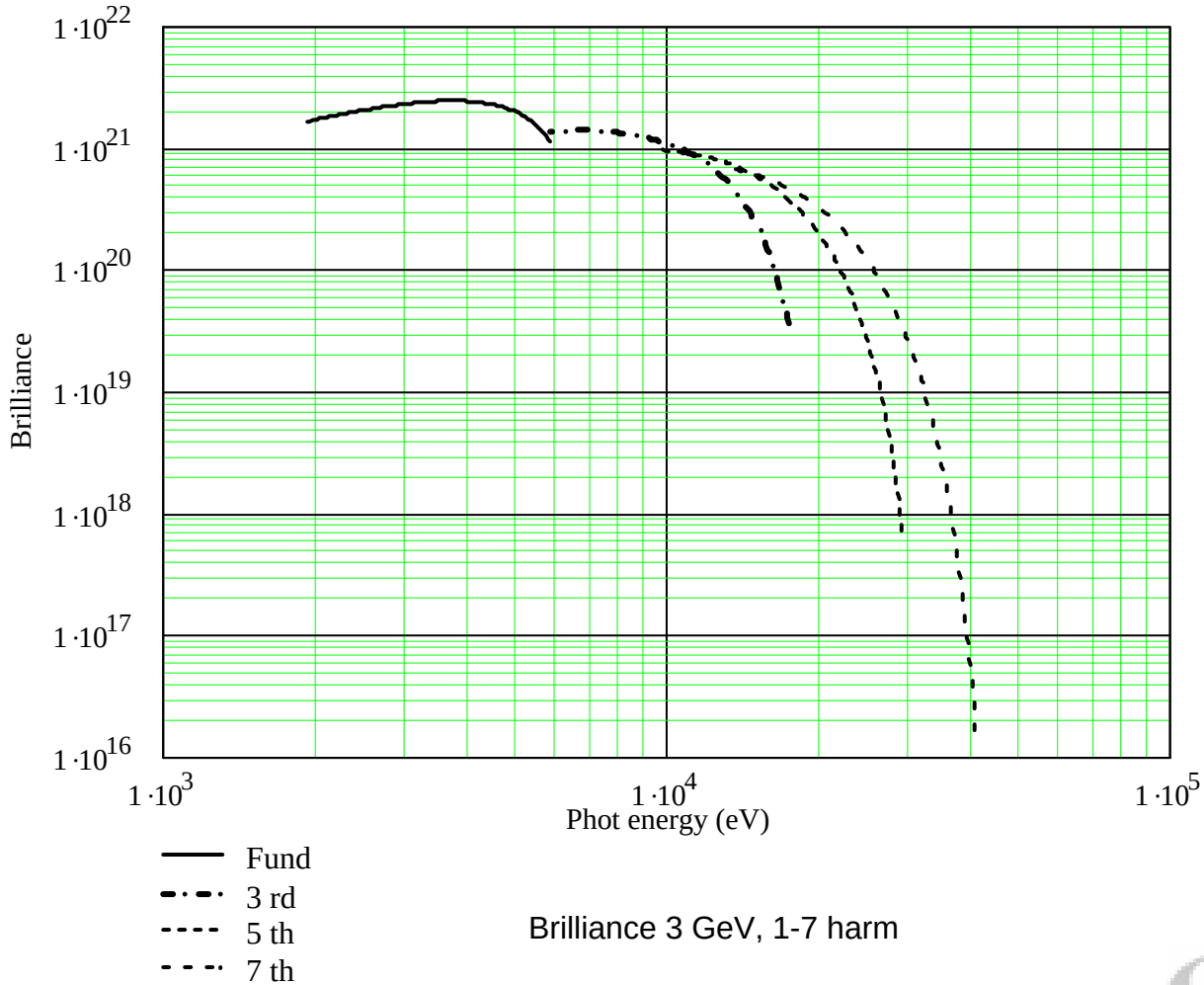

Brilliance 3 GeV, 1-7 harm

M. Eriksson, SRI 2003

Acknowledgement

MAX IV study:

Bengt Anderberg, Åke Andersson, Marlene Bergqvist, Sandra Biedron, Matias Brandin, Medine Demirkan, Greg Leblanc, Jörgen Larsson, Lars-Johan Lindgren, Lars Malmgren, Stephen Milton, Hamed Tarawneh, Erik Wallén, Sverker Werin.

The Knut and Alice Wallenberg Foundation has generously financed the MAX IV design study.