The MAX-Wiggler:
Design, Construction And Commissioning Of A 3.5 T Superconducting Wiggler With 47 Poles

E. Wallén [1] and G. LeBlanc [2]

MAX-Lab, Box 118, SE-22100 Lund, Sweden.

[1] As from February 2003, ESRF, BP 220, F-38043 Grenoble, France. Tel:+33476882564, Fax:+334762054, Email: wallen@esrf.fr.

[2] As from June 2003, Australian Synchrotron Project office, Level 18, Nauru House, 80 Collins Street, Melbourne VIC 3000, Australia.

Parameter list of the MAX-Wiggler.

Wiggler period	61 mm
Vertical Aperture	10.2 mm
Horizontal Aperture	70 mm
Total Length of Magnetic Assemblies	1472 mm
Number of Full Size Poles	47
Total Number of Poles	49
Peak Field	3.54 T
Peak Field for End Poles	2.10 T
K, Deflection Parameter	21.2
Total emitted power, 200 mA beam	5.0 kW
Stored magnetic energy	48 kJ

Two wiggler s have been built for the beamlines I811 and I911 at MAX II.

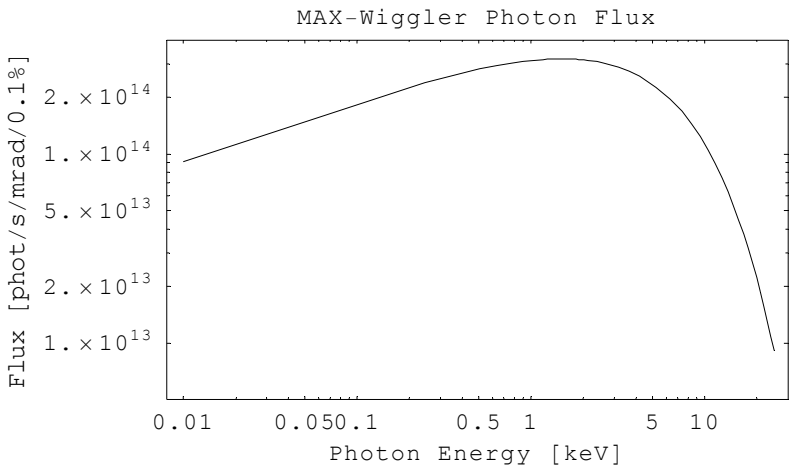

Spectral flux from the MAX-Wiggler with 200 mA of stored current in MAX II

E. Wallén

CASSIOPEIA

MAX-LAB Beamline 911

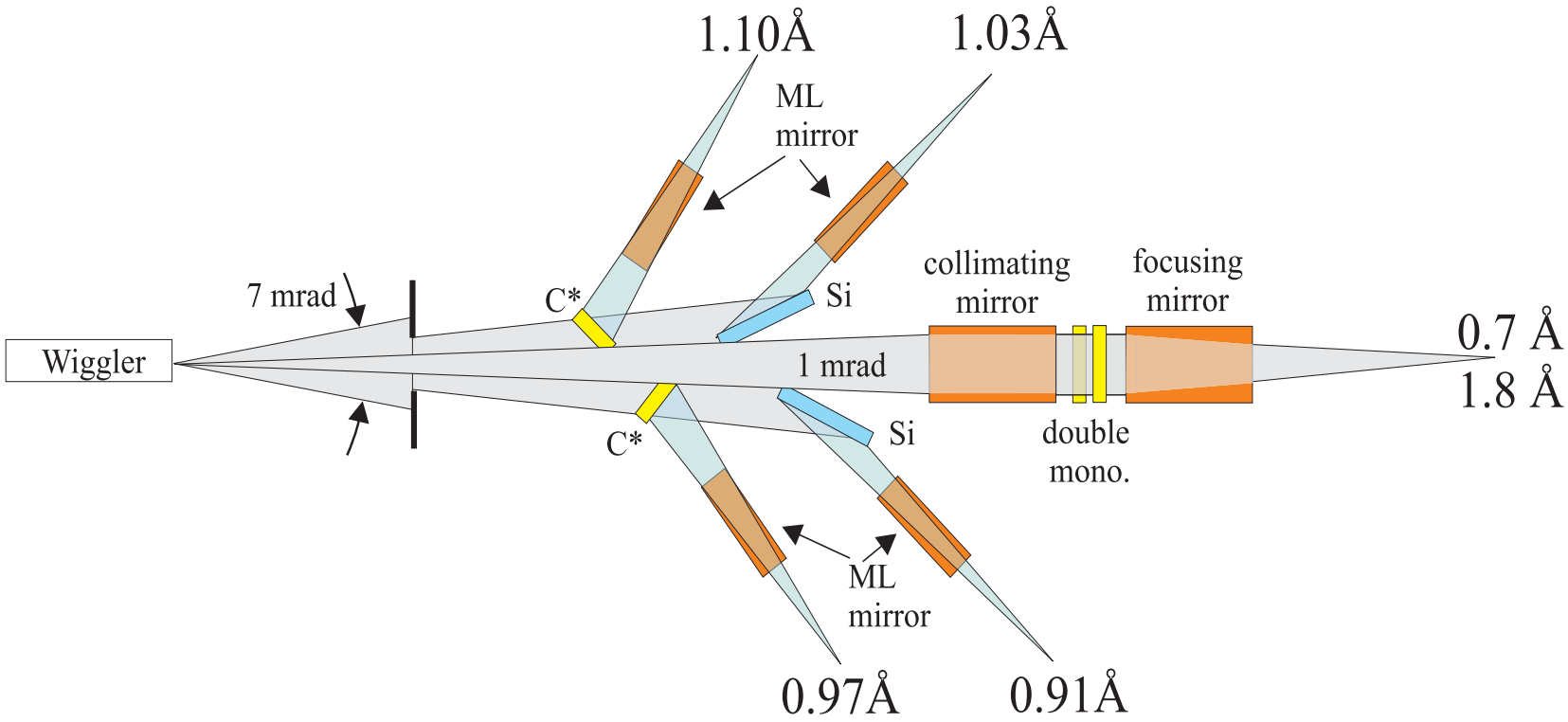

E. Wallén

The cryostat

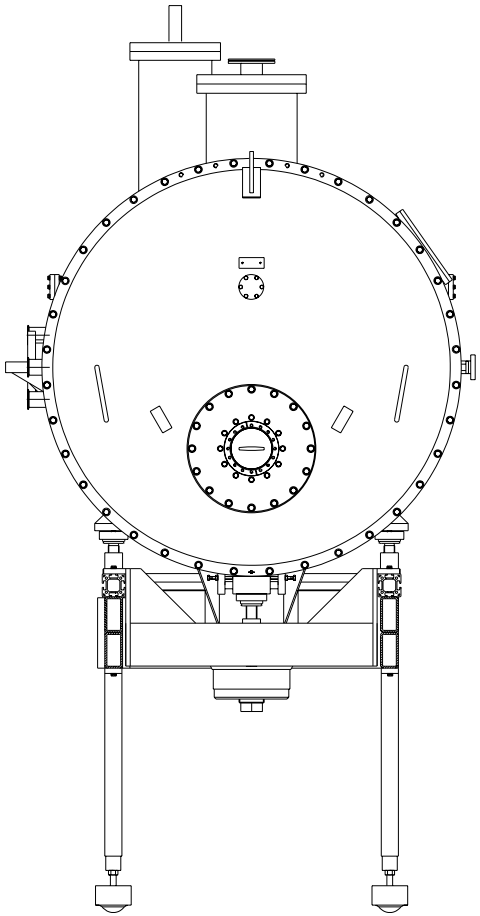

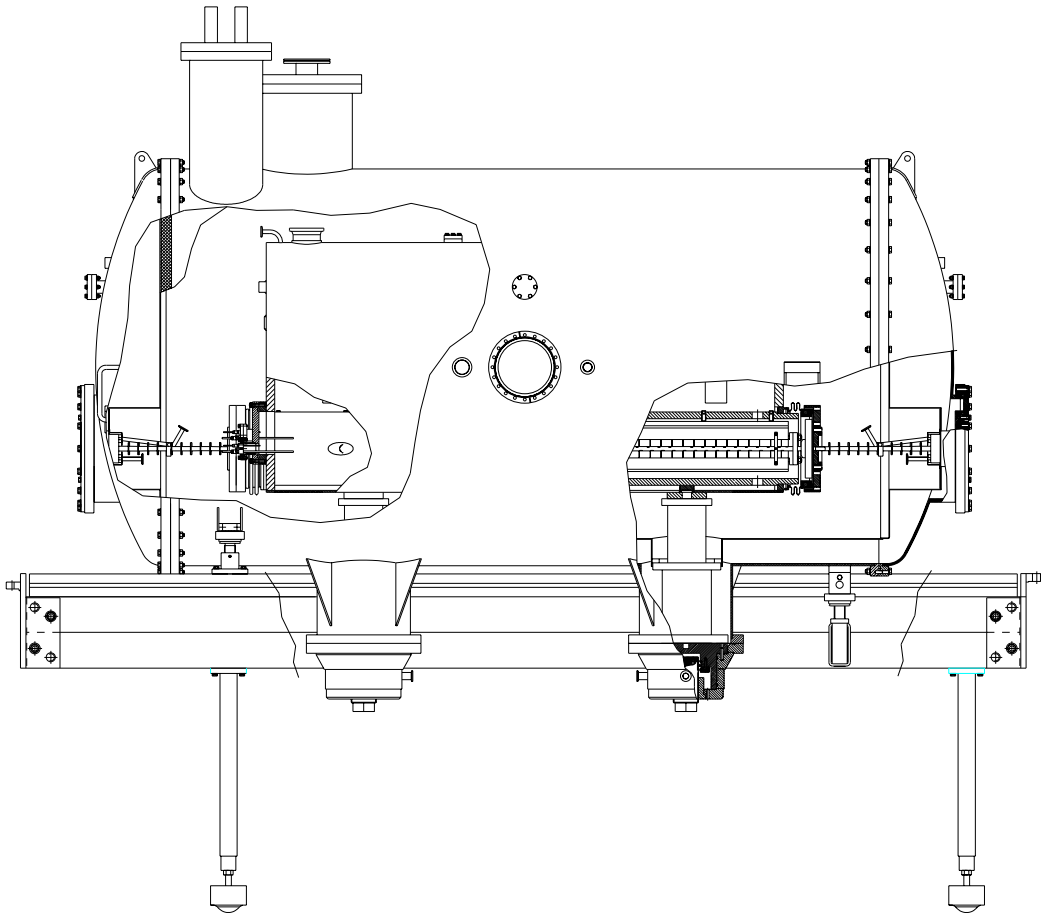

E. Wallén

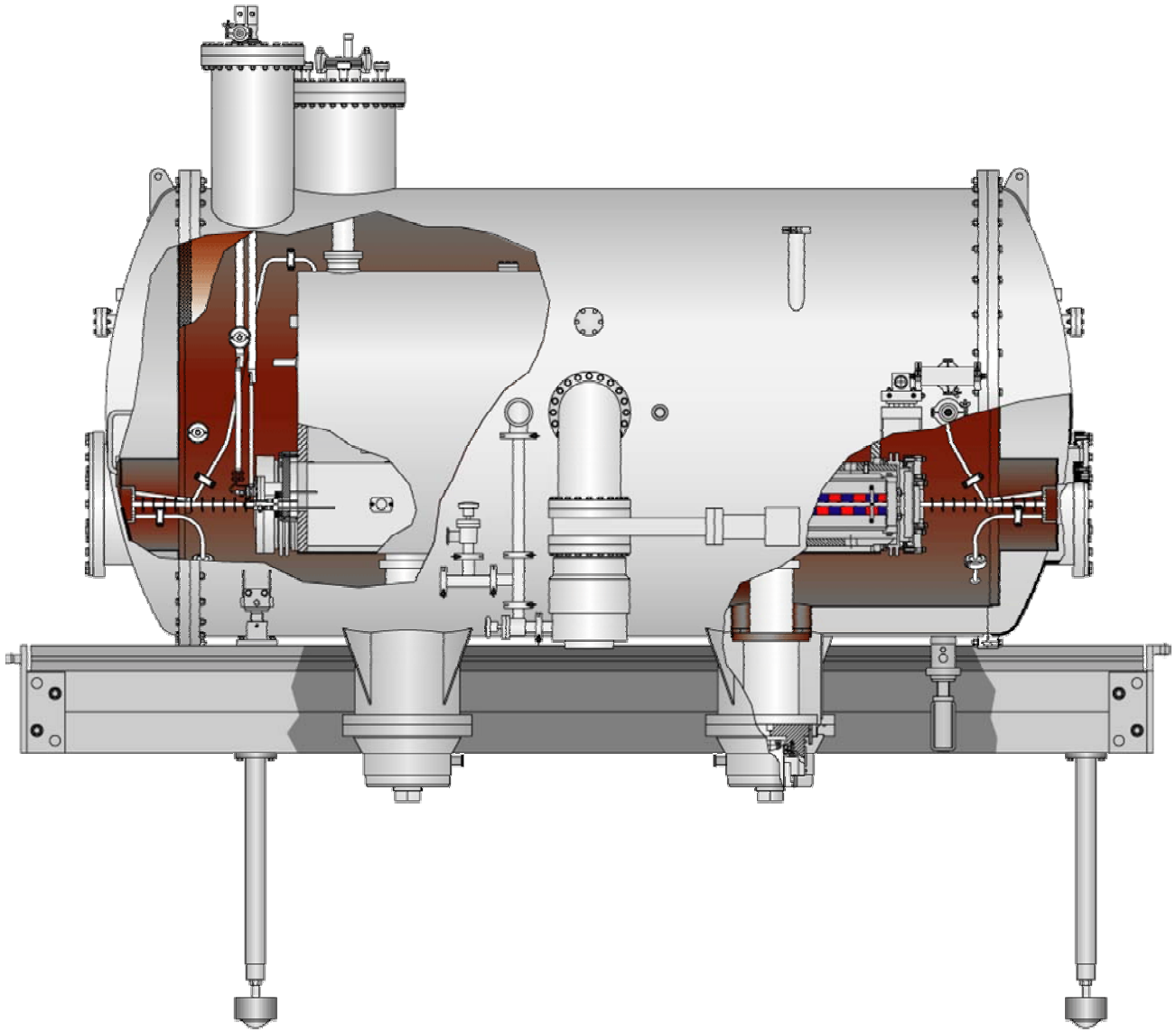

E. Wallén

Superconducting Pole Pair

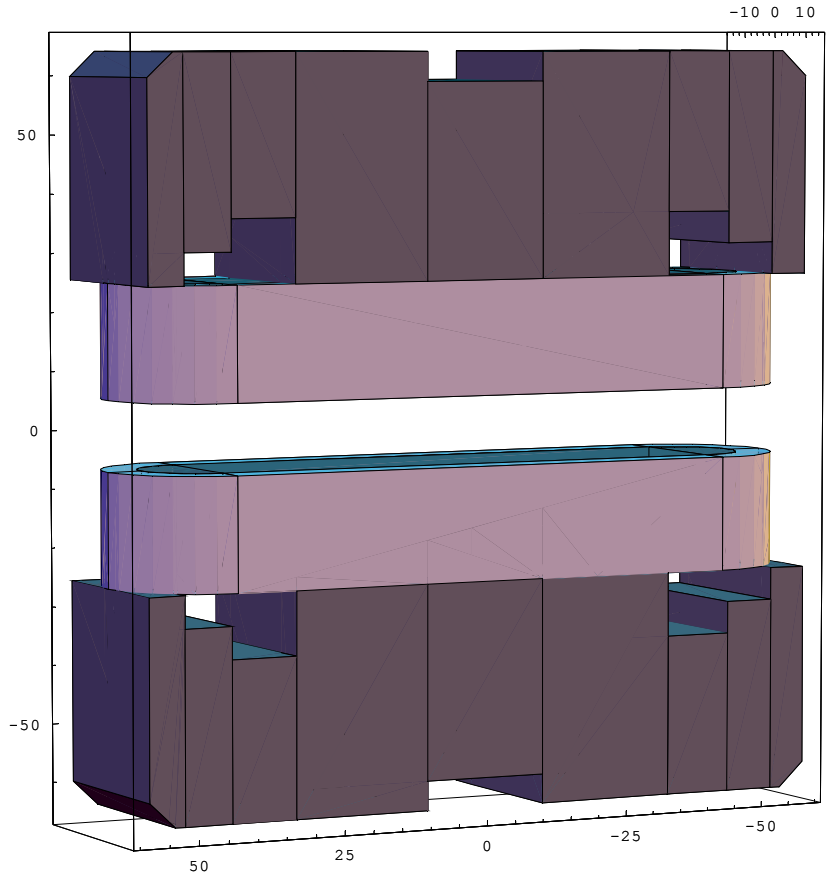

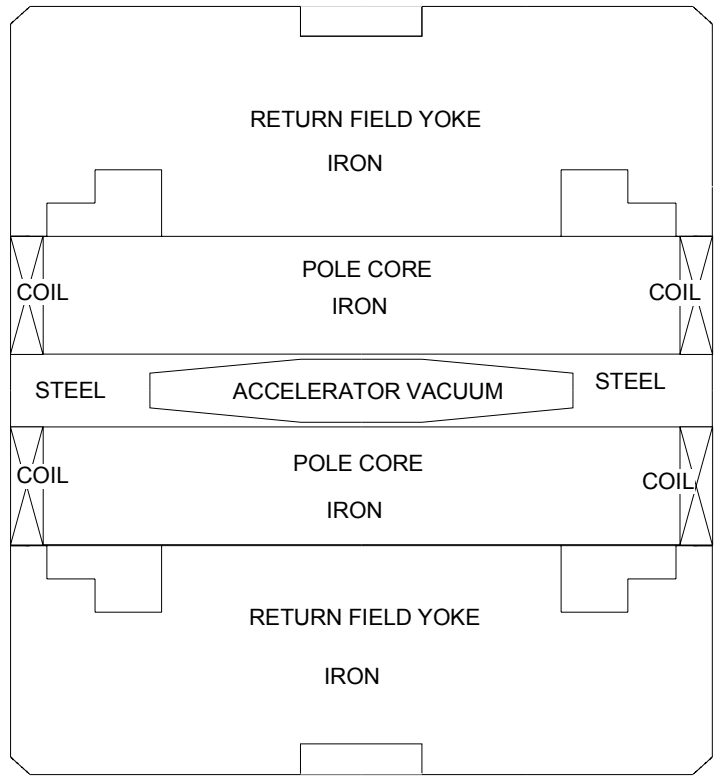

The aperture of the accelerator vacuum tube is
10.2 mm vertically and 70 mm horizontally.

E. Wallén

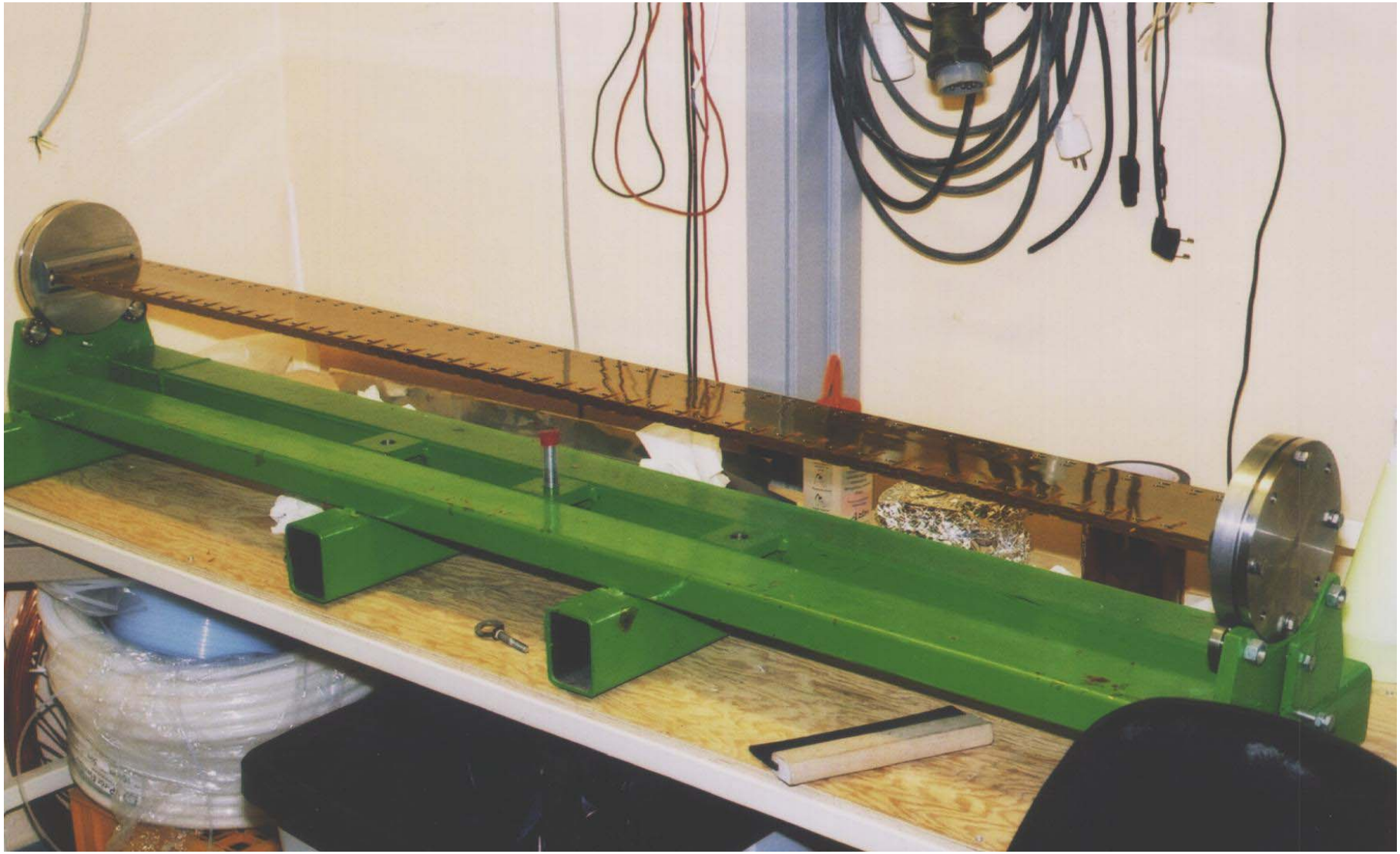

E. Wallén

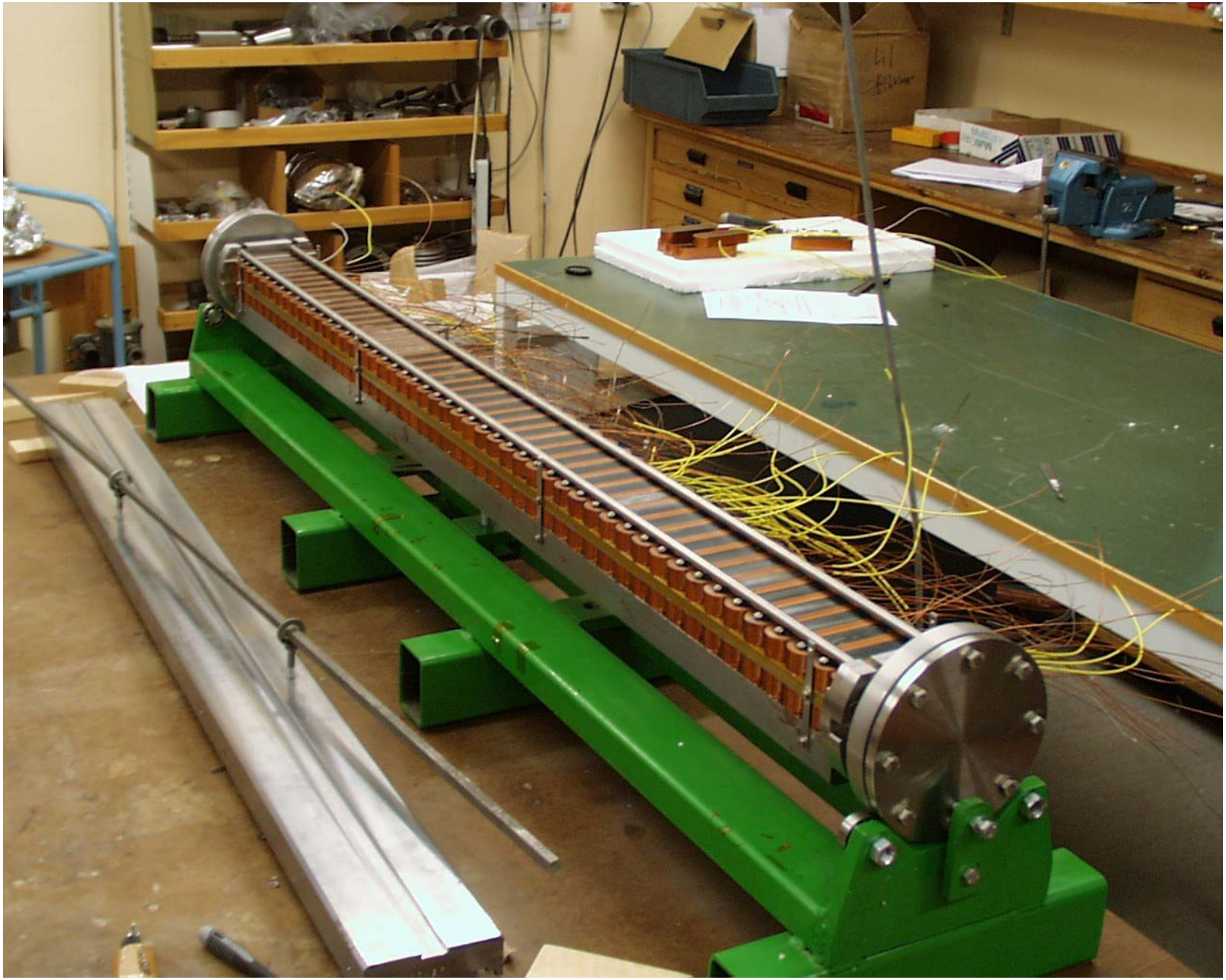

E. Wallén

E. Wallén

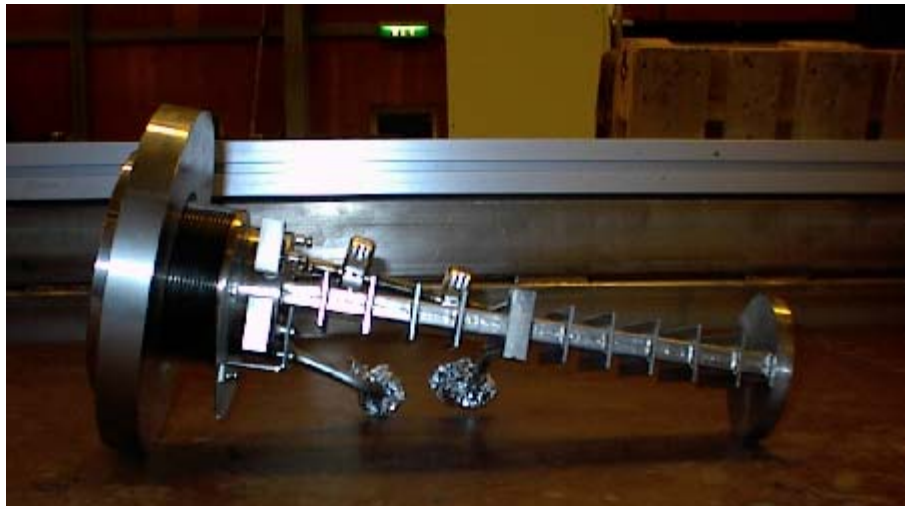

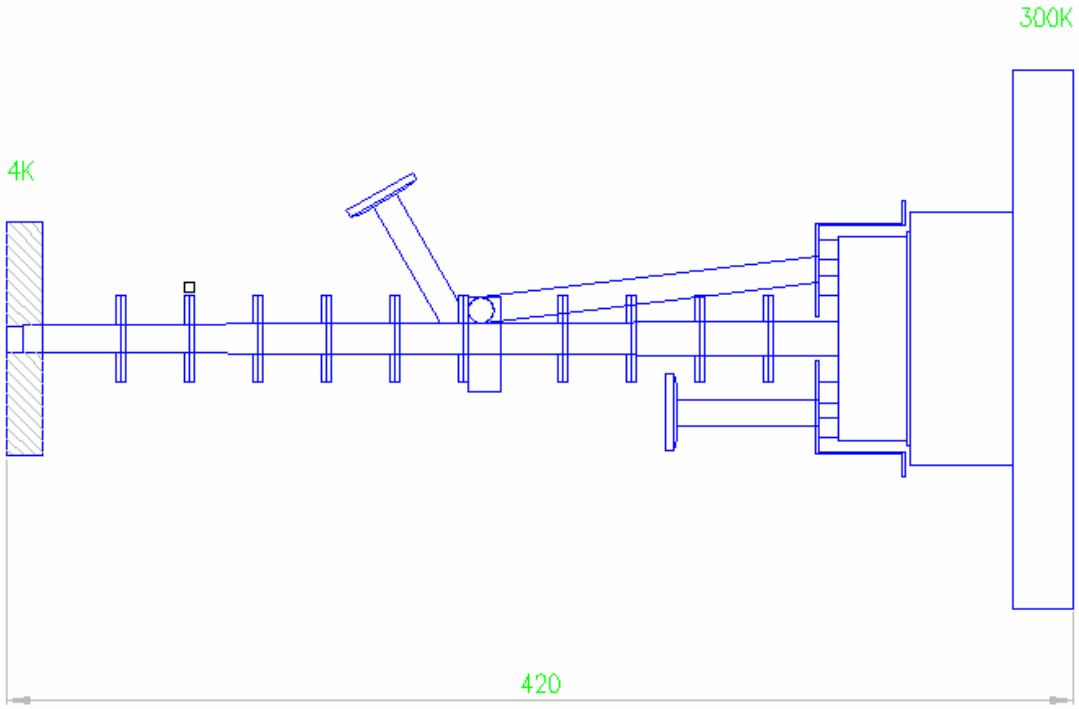

E. Wallén

E. Wallén

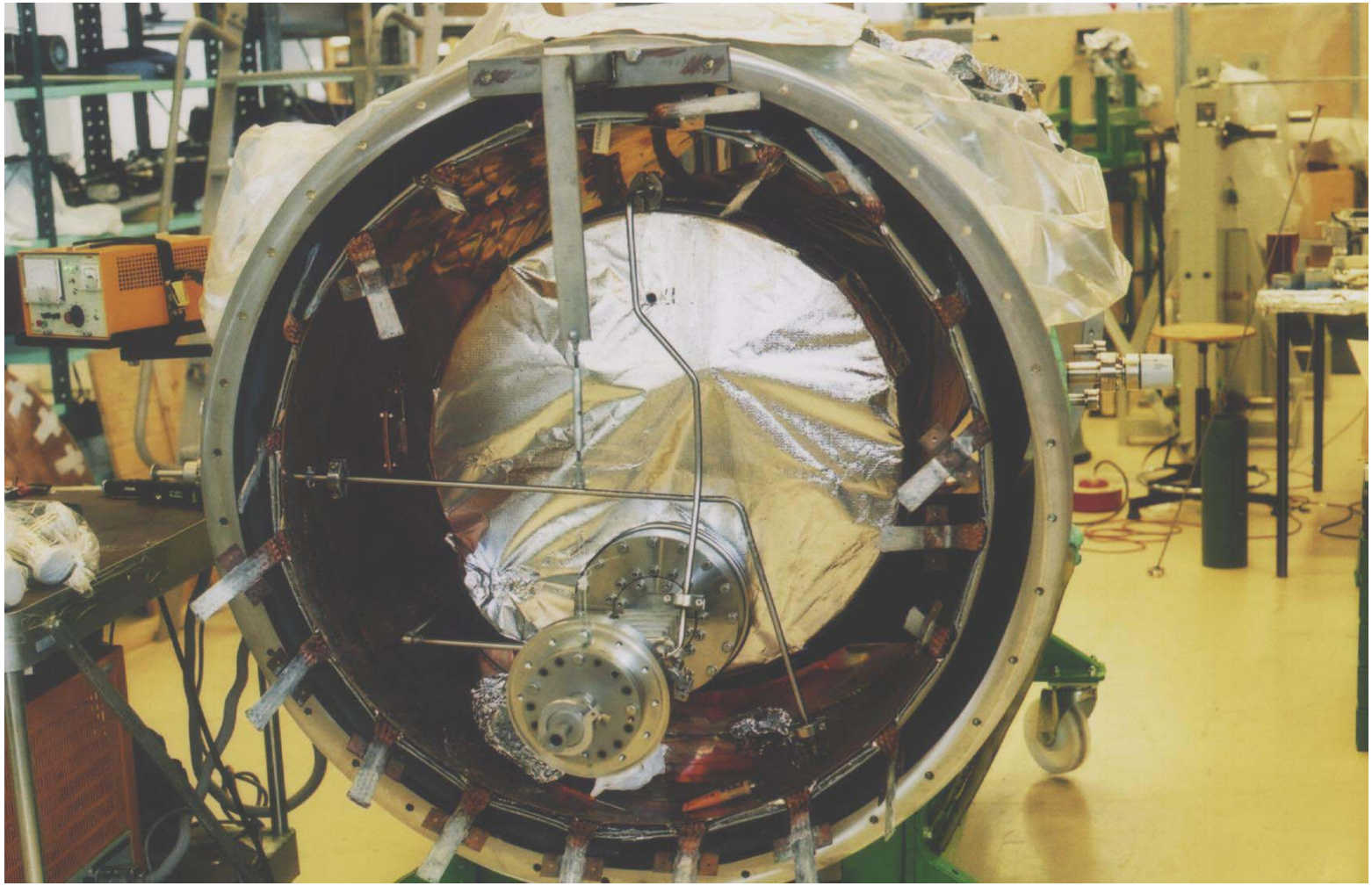

E. Wallén

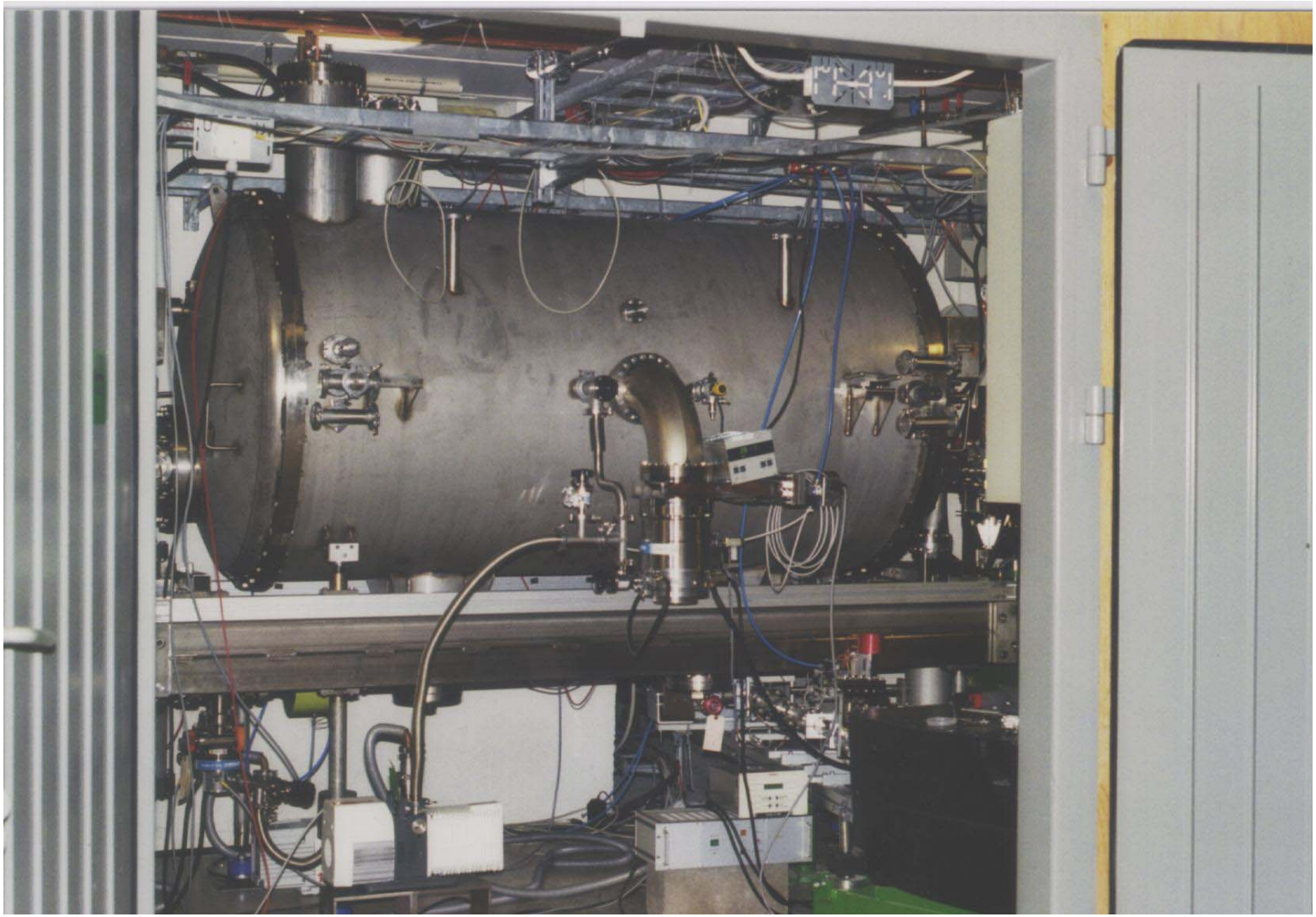

E. Wallén

The superconducting wire and stored magnetic energy

Properties of the superconducting wire in the MAX-Wiggler

Material	Niobium-Titanium in a Copper matrix
Cu/SC ratio	1.35
Cross section with insulation	0.77×0.51 mm^2
Cross section bare	0.72×0.46 mm^2
Insulation thickness	25 μm
Insulation Material	Formvar
Number of Filaments	54
Filament size	57 μm
RRR of Cu matrix	66

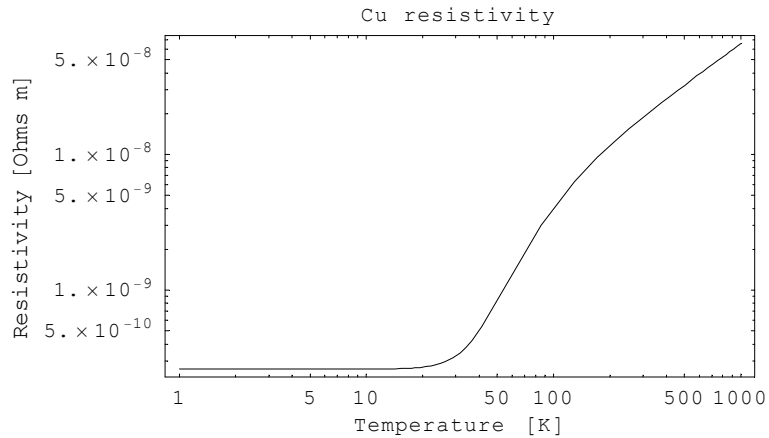

The resistivity of Cu (RRR=66) as a function of temperature.

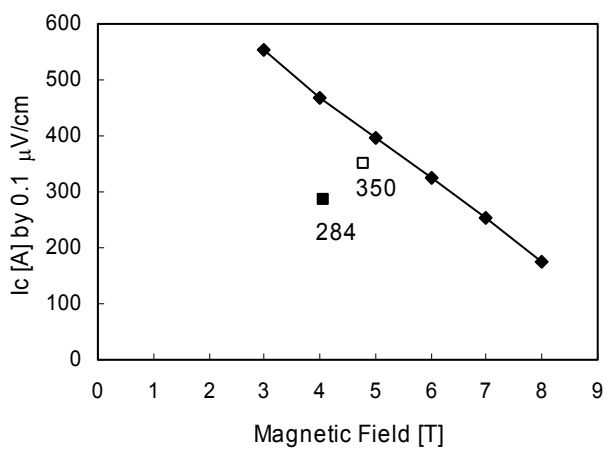

Critical current, Ic, of the wire used for the MAX-Wiggler.

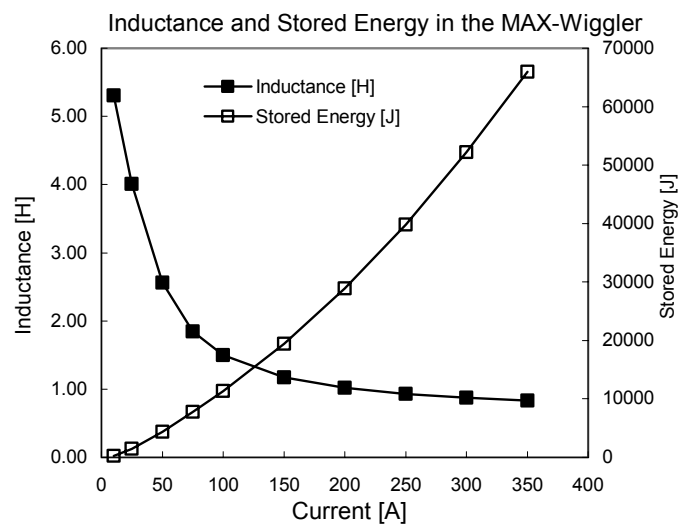

E. Wallén

Quench protection scheme

Protection by silicon diodes at 4.2 K

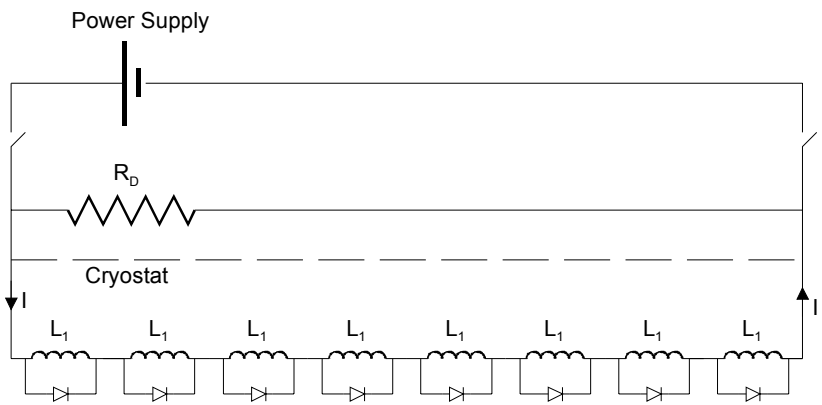

Schematic layout of the coupling scheme for the MAX-Wiggler magnet divided into N segments with equal inductance L_1, each with a shunt diode connected in parallel.

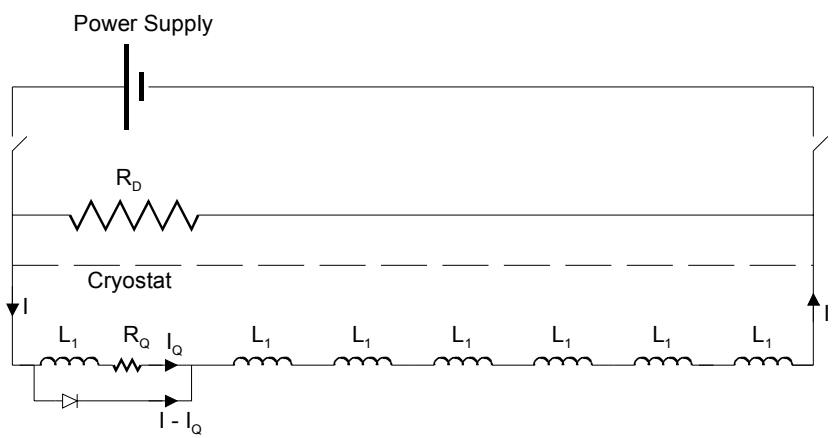

The equivalent circuit of the string of magnets at a quench after that current has started to flow through the by-pass diode.

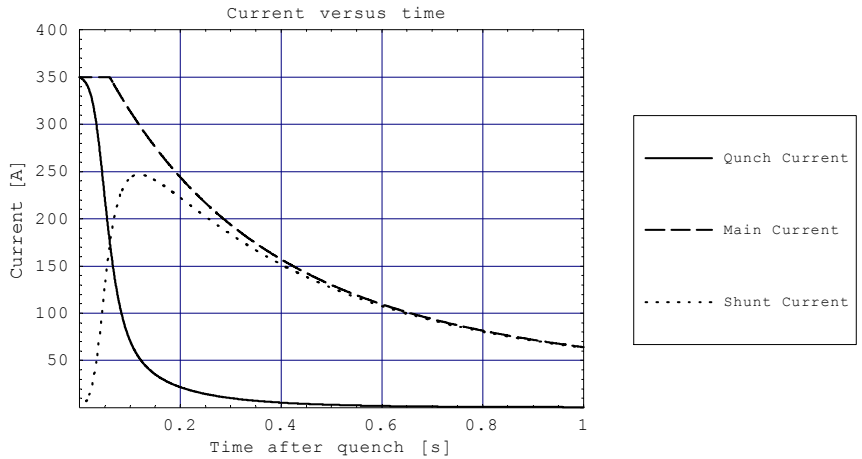

The simulated current decay in MAX-Wiggler after a quench.

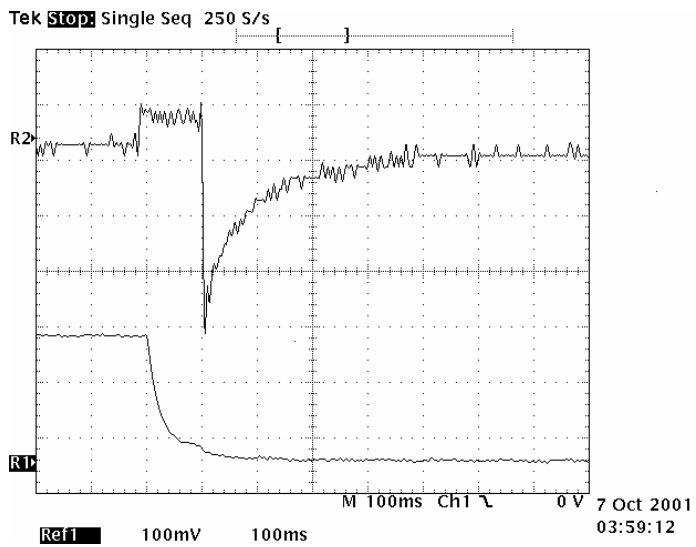

The measured current decay at a quench at 343 A.
The maximum voltage during the quench is about 40 V

E. Wallén

The complete wiggler has quenched in total 33 times

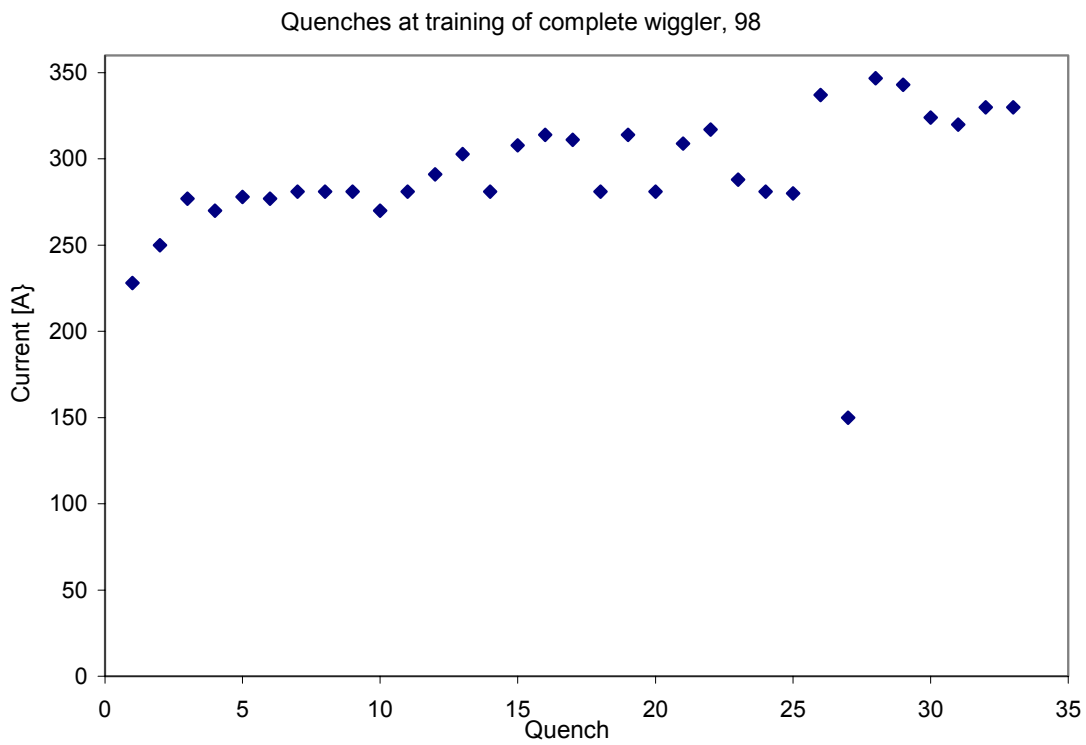

A large fraction of the magnetic energy is deposited in He-bath.
The quench spreads out quickly among the coils.
The dump resistor does not absorb much of the energy
The safety switch is too slow
The diodes are crucial for quench protection
The protection scheme works

E. Wallén

Machine optics, Experience with beam in MAX II

The main effect of the wiggler on the ring optics is the vertical focusing.

Response matrix measurements[*] and calibrated models have been used to determine the properties of the wiggler.

Starting point: Response matrix measurement made on MAX-II with no insertion devices and a model was calibrated using the measurements.

The wiggler can be ramped to the full field without correcting the optics.

Next point: Measure a new response matrix without changing any of the quadrupoles.

A surface plot of the difference between the two response matrices shows that the effect of the wiggler is primarily in the vertical plane.

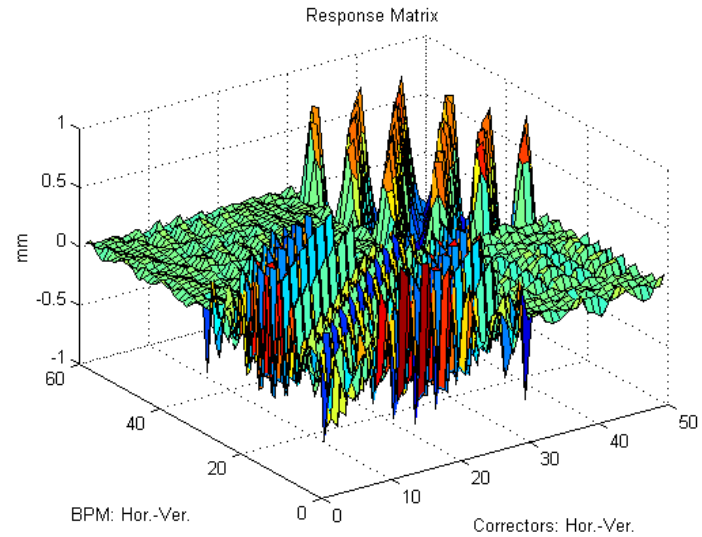

Measured response matrix.

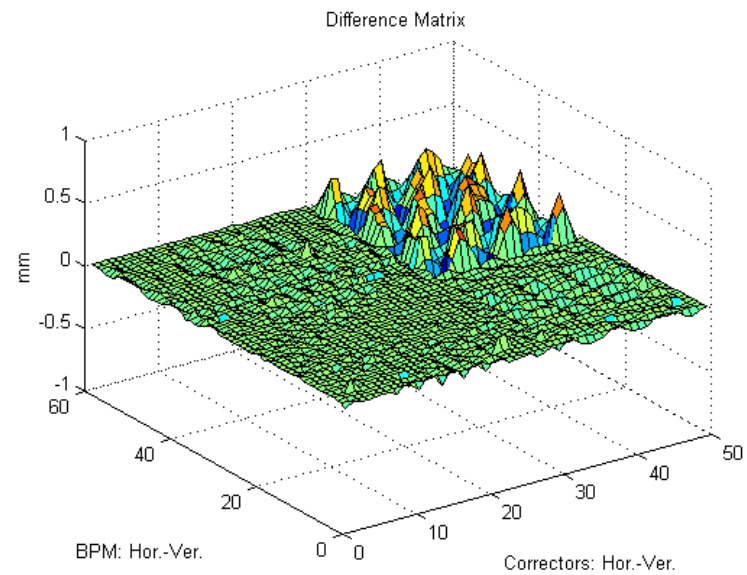

Difference in response matrix with wiggler.

[*] J. Safranek, Nucl. Instr. And Meth. In Phys. A, **388** (1997) 27.

E. Wallén

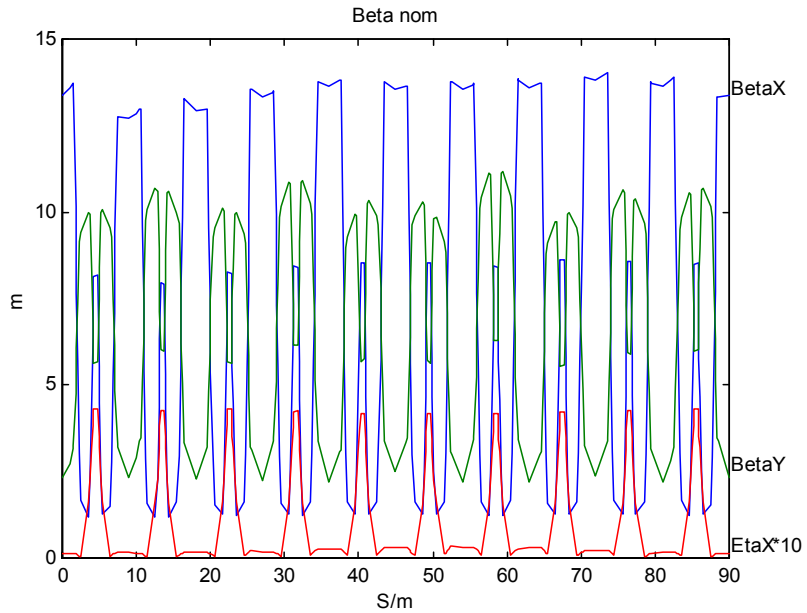

Machine functions from the calibrated model, no wiggler.

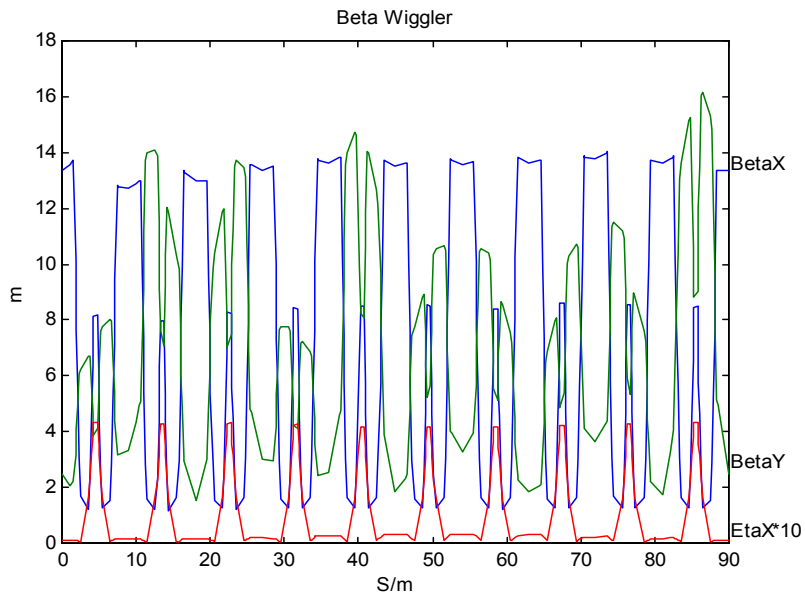

Machine functions from the calibrated model with wiggler.

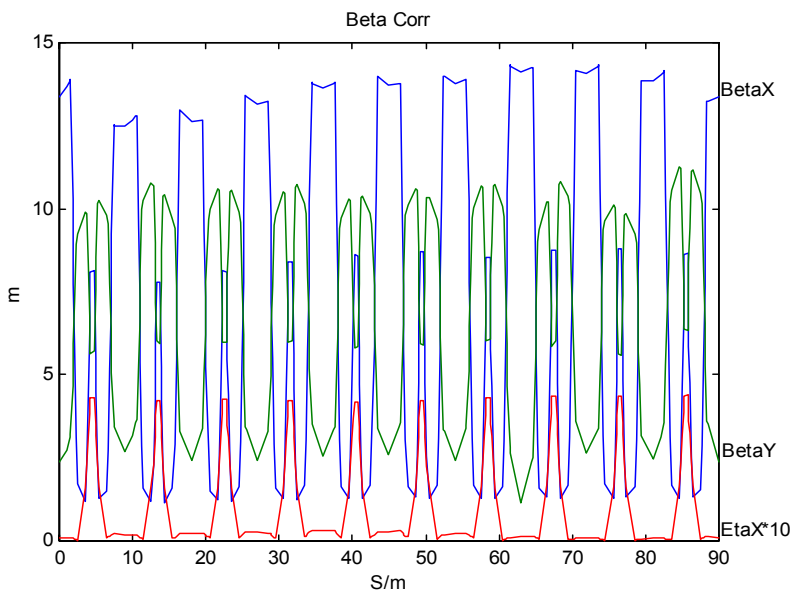

Machine functions from the calibrated model with wiggler and corrections.

The correction scheme used is based on reducing the vertical beta function in the wiggler.

A separate power supply increases the strengths of the adjacent vertical quadrupoles. The adjacent horizontal quadrupoles are also fitted with extra power supplies.

All changes so far have been increased focusing so it is necessary to reduce the two quadrupole families in the ring.

These corrections were calculated using the calibrated model and then applied to the ring while the wiggler was at full current.

A new response matrix was measured and the measurment shows that this is an efficient method to correct machine optics.

E. Wallén

Effects on the stored beam by the MAX-Wiggler.

Parameter	Value	
B_0	3.54 T	
ρ	1.41 m	
β_y	2.2 m	
L (47×0.0305m)	1.43 m	
k (2π/period)	103 m^{-1}	
Sinusoidal Approximation	**Expected**	**Measured**
$k_x \approx 0$	6.5i m^{-1}	-
$k_y \approx k$	103.2 m^{-1}	-
K_{Qx}	-1.0×10-3 m^{-2}	-2.6E-4 m^{-2}
$L\ K_{Qx}$	-1.4×10^{-3} m^{-1}	-3.8E-4 m^{-1}
K_{Qy}	0.25 m^{-2}	0.26 m^{-2}
$L\ K_{Qy}$	0.36 m^{-1}	0.3754 m^{-1}
$\Delta\nu_y$	0.063	0.0593

There is no observable chromaticity change Induced by the MAX-Wiggler.

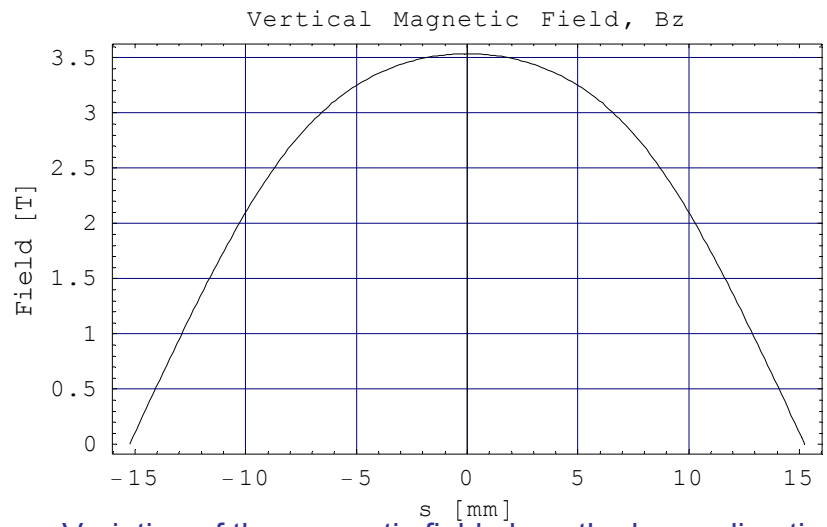

Variation of the magnetic field along the beam direction.

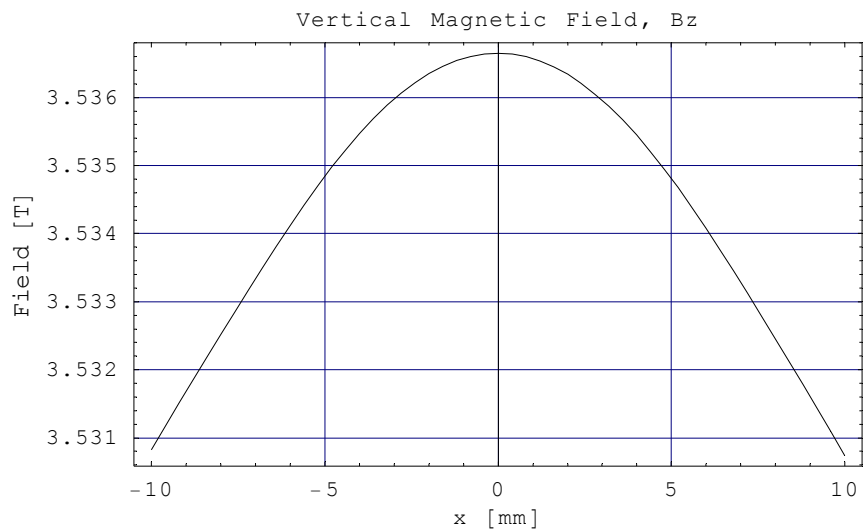

Transverse variation of the magnetic field at the centre of a pole.

E. Wallén

The MAX wiggler cryostat is cooled by a liquid He bath.

The boiled-off He gas is used for cooling the accelerator vacuum tube between the cold bore and the rest of the ring, as well as the current leads.

There is a thermal shield between the He vessel and the outer vacuum tank that is cooled using liquid nitrogen.

The buffer volume in the He vessel is about 320 litres, which is sufficient for five days of operation.

The He consumption with stored beam in the ring averages 2.5 l/hour. This corresponds to a heat load of 1.8 W. The heat load with no current in the ring is 1.5 l/h or 1.1 W.

There is no observable increase in the He consumption with the wiggler at full field.

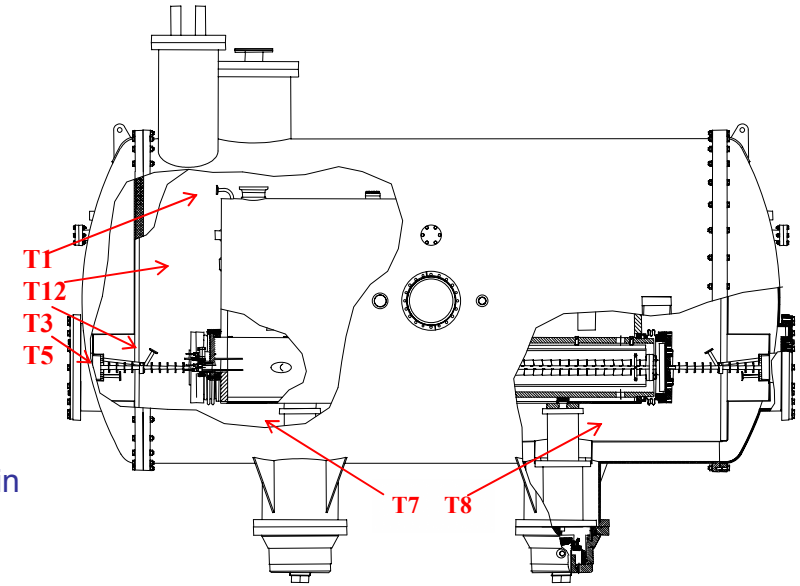

Drawing of the cryostat with temperature levels indicated.

A plot of the temperature levels, the ring current, and the He level in the cryostat. The data was taken on a day when the cryostat was refilled.

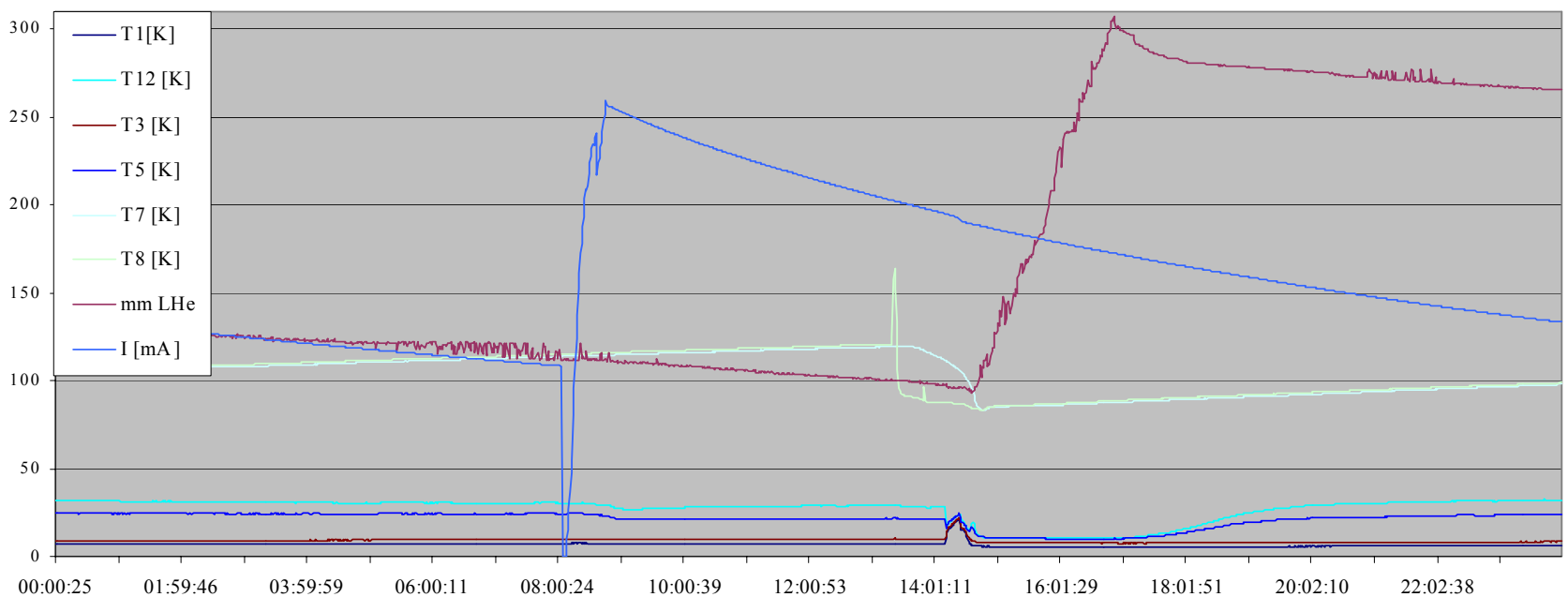

E. Wallén

Detailed measurement of heat loads.

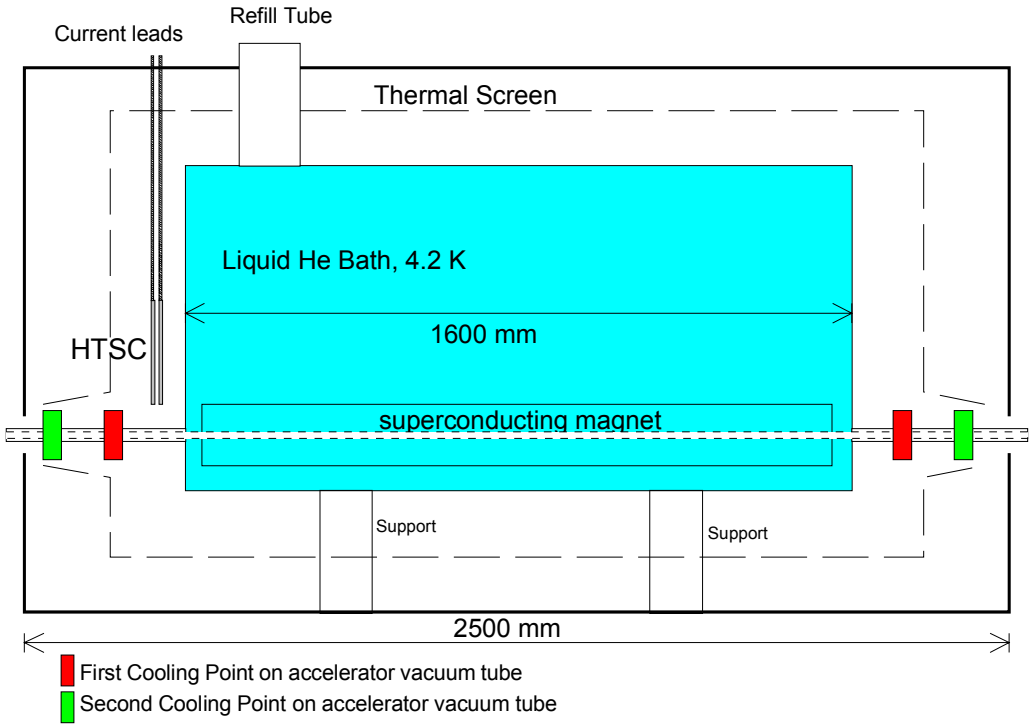

	190 mA σ= 24 mm		170 mA σ≈ 7.5 mm		0 mA		0 mA	
Description	T [K]	Q [W]	T [K]	Q [W]	T [K]	Q [W]	T [K]	Q [W]
The liquid He Bath	4.2	1.58	4.2	2.04	4.2	0.88	4.2	1.26
First Cooling Point on accelerator vacuum tube	7.1	0.99	7.5	1.50	7.0	0.39	7.5	0.51
Second Cooling Point on accelerator vacuum tube	22	5.27	23	7.11	25	3.57	22.5	3.75
Thermal Screen around Liquid He vessel	83	12	85	12	96	12	117	12

E. Wallén

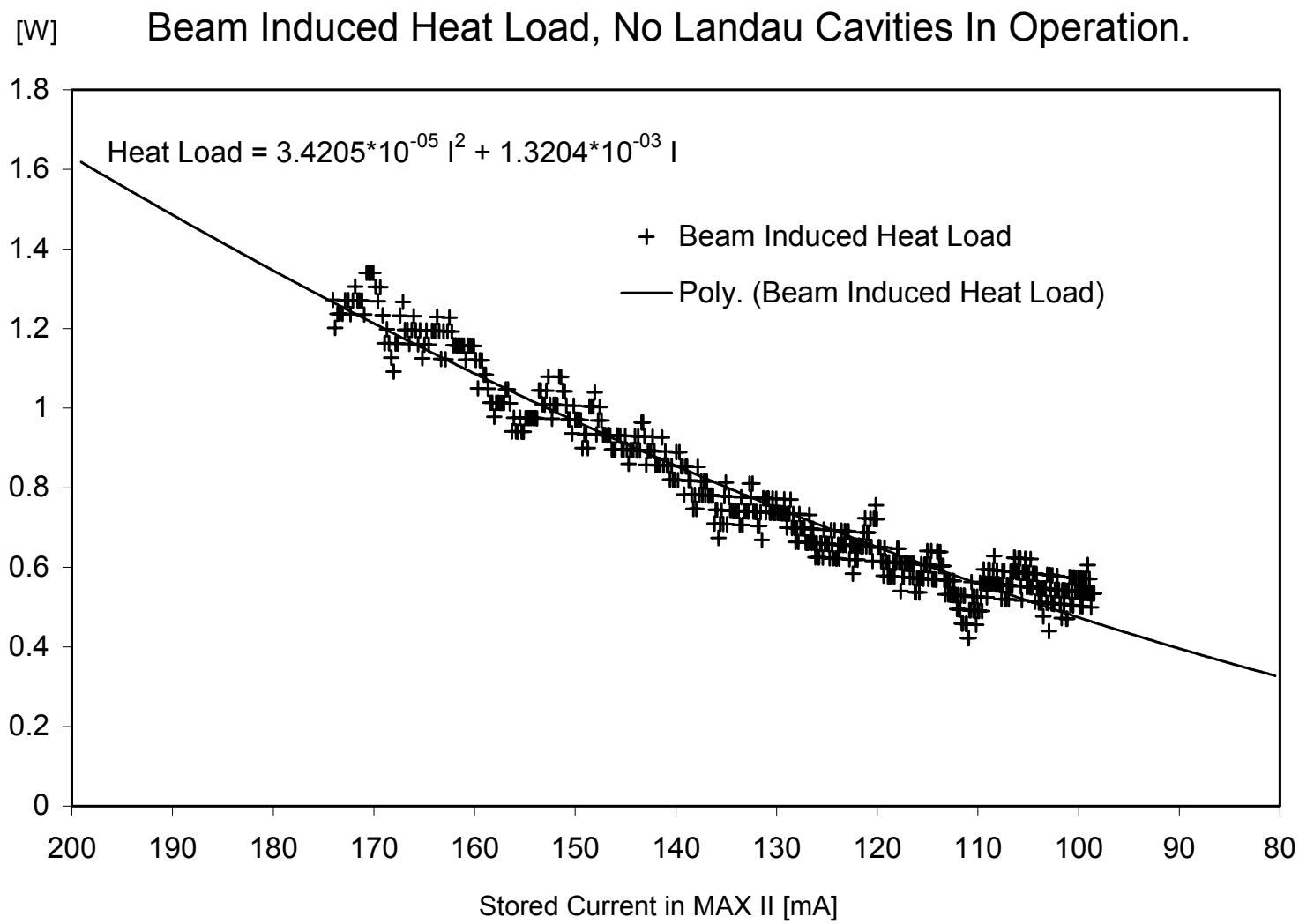
[W]
Beam Induced Heat Load, No Landau Cavities In Operation.
Heat Load = 3.4205*10^-05 I^2 + 1.3204*10^-03 I
+ Beam Induced Heat Load
Poly. (Beam Induced Heat Load)
1.8
1.6
1.4
1.2
1
0.8
0.6
0.4
0.2
0
200
190
180
170
160
150
140
130
120
110
100
90
80
Stored Current in MAX II [mA]

E. Wallén

Thermal Budget

	Source	0 mA		200 mA, 24 mm long bunches					200 mA, ≈7.5 mm long bunches				
		Estimated [W]	Measured [W]	Estimated RRR=1 [W]	Estimated RRR=2 [W]	Estimated RRR=10 [W]	Estimated RRR=100 [W]	Measured [W]	Estimated RRR=1 [W]	Estimated RRR=2 [W]	Estimated RRR=10 [W]	Estimated RRR=100 [W]	Measured [W]
The liquid He Bath	Image Currents			0.153	0.117	0.065	0.048	0.594	0.906	0.682	0.384	0.296	1.368
	synchrotron Radiation			0.122	0.122	0.122	0.122	0.264	0.122	0.122	0.122	0.122	0.264
	Thermal Radiation	0.135	0.196	0.130	0.130	0.130	0.130	0.111	0.139	0.139	0.139	0.139	0.121
	Thermal Conductance	0.519	0.686	0.599	0.599	0.599	0.599	0.686	0.599	0.599	0.599	0.599	0.686
	SUM	0.654	0.882	1.004	0.968	0.916	0.899	1.655	1.766	1.542	1.244	1.156	2.439
First Cooling Point on accelerator vacuum tube	Image Currents			0.025	0.020	0.013	0.011		0.148	0.117	0.077	0.064	
	synchrotron Radiation			0.010	0.010	0.010	0.010		0.010	0.010	0.010	0.010	
	Thermal Radiation	0.060	0.096	0.039	0.039	0.039	0.039		0.039	0.039	0.039	0.039	
	Thermal Conductance	0.270	0.298	0.157	0.157	0.157	0.157		0.157	0.157	0.157	0.157	
	SUM	0.330	0.394	0.231	0.226	0.219	0.217	1.026					1.826
Second Cooling Point on accelerator vacuum tube	Image Currents			0.019	0.015	0.010	0.008		0.114	0.090	0.059	0.049	
	synchrotron Radiation			0.010	0.010	0.010	0.010		0.010	0.010	0.010	0.010	
	RF Effects			0.500	0.500	0.500	0.500		0.500	0.500	0.500	0.500	
	Thermal Radiation	1.005		1.005	1.005	1.005	1.005		1.005	1.005	1.005	1.005	
	Thermal Conductance	0.680		0.680	0.680	0.680	0.680		0.680	0.680	0.680	0.680	
	SUM	1.685	3.569	2.214	2.210	2.205	2.203	5.375	2.309	2.285	2.254	2.244	8.140
Thermal Screen around Liquid He vessel	Thermal Radiation	7.9					7.9					7.9	
	Thermal Conductance	1.6					1.6					1.6	
	SUM	9.5	12.0				9.5	12.0				9.5	12.0

Scaled to 200 mA from measurements at 170 and 190 m

Of special interest:

	σ= 24 mm [W]	σ≈ 7.5 mm [W]
Total heat load from beam	0.858	1.589
Image Currents	0.594	1.368
Synchrotron radiation	0.264	0.264

•Indicates an RRR value of <1 for the Cu coating used or RF heating. Heat load due to RF effects is difficult to predict and scales lin the same as image currents

•Indicates a heat load from Synchrotron Radiation larger than expected. It is sensitive to the position of the scraper.

•Heat load due to thermal conductance and thermal radiation about as expected.

E. Wallén

Experience gained:

Positive:

Cold bore superconducting insertion devices work.

Moderate heat loads, however higher than expected.

Machine optics is not detoriated by the new insertion device.

Negative:

Numerous unexpected problems, e.g. bad adhesion iron-epoxy.

Work is time consuming due to cooling down and warming up times.

Transfer and production of liquid He in large quantities is not always trivial.

The RRR value of the Cu coating in vacuum chamber is sensitive to heat treatment.

More resources needed for operation compared to standard insertion devices.

People involved in the MAX-Wiggler project:

Erik Wallén

Greg LeBlanc

Mikael Eriksson

Leif Thånell

Håkan Svensson

Magnus Boberg